Features

- ◆Single fiber bi-directional data links asymmetric TX 2.5Gbps/RX1.25bps application
- ◆ 1310nm Burst-mode APD/TIA receiver and 1490nm Continuous DFB laser Transmitter (with WDM)
- ◆ SFP metallic package
- ◆ Single SC receptacle optical interface compliant
- ◆ Hot-pluggable
- ◆+3.3V single power supply
- ◆ Low power consumption
- ◆Fast settling time with immunity to long steams of CID
- ◆ Digitalized burst mode optical power monitoring
- ◆ LVPECL compatible data input and output interface
- ◆LVTTL receiver reset control
- ◆ LVTTL receiver burst-power-detect indication
- ◆ Excellent EMI and EMC characteristics
- ◆Class 1 Laser eye safety standard
- ◆ESD protection function
- ◆RoHs compliant

Applications

- ◆ Gigabit-capable Passive Optical Networks (GPON) 20Km 13~32dB attenuation range. Standard
- ◆ Complies with ITU-T G.984.2 Amendment 1
- ◆ Complies with SFP Multi-Source Agreement (MSA) SFF-8074i
- ◆ Complies with SFF-8472 Rev 9.5
- ◆ Complies with FCC 47 CFR Part 15, Class B

Absolute Maximum Ratings

Parameter	Symbol	Unit	Min	Max
Operating Case Temperature Range	T_C	°C	0	70
Storage Temperature Range	T_S	°C	-40	85
Relative Humidity	RH	%	5	95
Power Supply Voltage	V_{CC}	V	0	3.6
Pin Input Voltage		V	GND	Vcc
Receiver Damage Threshold		dBm	+4	-

Recommended operating conditions

Parameter	Symbol	Unit	Min	Typ	Max
Operating Voltage	V_{CC}	V	3.13	3.3	3.47
Operating CaseTemperature Range	T_{op}	°C	0	-	70
Operating Data Rate（Tx）		Mbps	-	2488.32	-
Operating Data Rate（Rx）		Mbps		1244.16	

TRANSMITTER ELECTRICAL CHARACTERISTICS

Parameter	Symbol	Unit	Min	Typical	Max	Notes
Operating Voltage	V_{op}	V	3.13	3.3	3.47	
Power Supply Current	I_{CC}	mA		-	600	
Data Input Differential Swing		mV	200	-	1600	LVPECL input, AC coupled
Differential Data input impedance		Ω	-	100	-	
Transmitter Disable Voltage - Low		V	0	-	0.8	
Transmitter Disable Voltage - High		V	2.0	-	VCC	
Transmitter Fault Alarm Voltage - Low		V	0		0.4	

Transmitter Fault Alarm Voltage – High		V	2.4		VCC	
Transmitter Optical Characteristics						
Data Rate		Mbps	-	2488.32	-	
Center Wavelength Range	λC	nm	1480	1490	1500	
Spectral Width(@-20dB)	Δλ	nm	-	-	1	
Side Mode Suppression Ratio	SMSR	dB	30		-	
Launch Optical Power	P_0	dBm	+3	-	+7	Note3
Optical Output Power with TX OFF		dBm	-	-	-40	
Extinction Ratio	EX	dB	8.2	-	-	Note4/5
Tolerance to Transmitter Incident Light		dB	-15	-	-	λ=1.49μm
Transmitter and Dispersion Penalty	TDP				1	
Eye Diagram	Compliant with ITU-T G.984.2					Note4/6

RECEIVER ELECTRIAL CHARACTERISTICS

Parameter	Symbol	Unit	Min	Typical	Max	Notes
Power Supply Current		mA			350	
Data Output Voltage – Low（-Vcc）		V	-1.81	-	-1.62	
Data Output Voltage – High（-Vcc）		V	-1.02	-	-0.88	
Data Output Differential Swing		mV	400		1600	LVPECL output, DC coupled
Receiver Amplitude Recovery Time	TRECOVERY	bits	-	24	-32	Refer to the Reset signal falling edge
Signal Detect de-assert Time		ns		-	12.8	
Signal Detect assert Time		ns		-	50	Refer to the Reset signal rising edge
Signal Detect Voltage-Low		V	0		0.4	
Signal Detect Voltage-High		V	2.4		VCC	
Guard time	TGUARD	bits		32		
Reset width	TRESET	bits		16		
I2C Access Prohibited Time		us	100		500	

receive Optical Characteristics						
Data Rate		Mbps	-	1244.16	-	
Receiver Sensitivity	S	dBm	-	-	-32	Note7
Overload Input Optical Power	P_{IN}	dBm	-8	-	-	Note7
Center Wavelength Range	λc	nm	1260	1310	1360	
Dynamic Range		dB	15			
Receiver reflectance		dB	-	-	-12	λ=1.31μm
Signal Detect De-Assert Level	SDD	dBm	-45	-	-	
Signal Detect Assert Level	SDA		-	-	-34	
Signal Detect Hysteresis		dB	0.5		6	
RX Power Monitor	-30 to -8dBm	dBm	-2		+2	Normal Temperature
			-3		+3	Over Temperature

Note3: Measured with 9/125um G.652 SMF.
Note4: Filtered, Measured with PRBS223-1 test pattern @2.488Gbps.
Note5: Measured with the Bessel-Thompson filter OFF.
Note6: Eye pattern mask

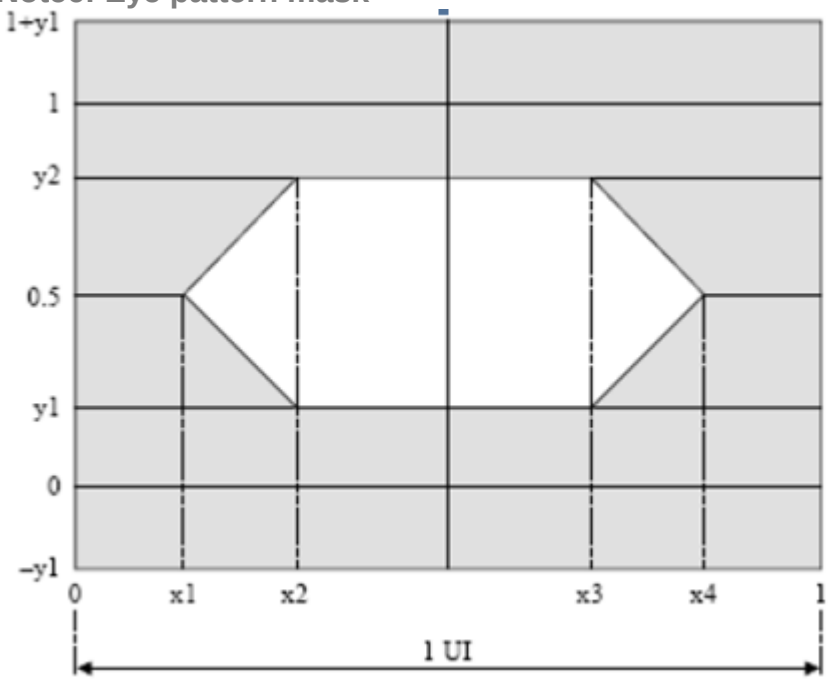

	1244.16 Mbit/s	2488.32 Mbit/s
x1/x4	0.28/0.72	---
x2/x3	0.40/0.60	---
x3 – x2	---	0.2
y1/y2	0.20/0.80	0.25/0.75

Note 7: Measured with a PRBS 2^{23}-1 test pattern @1.244Gbps, BER $1X10^{-4}$.
Note 8: LOS Hysteresis (SD signal coincides with the LOS signal inversion)

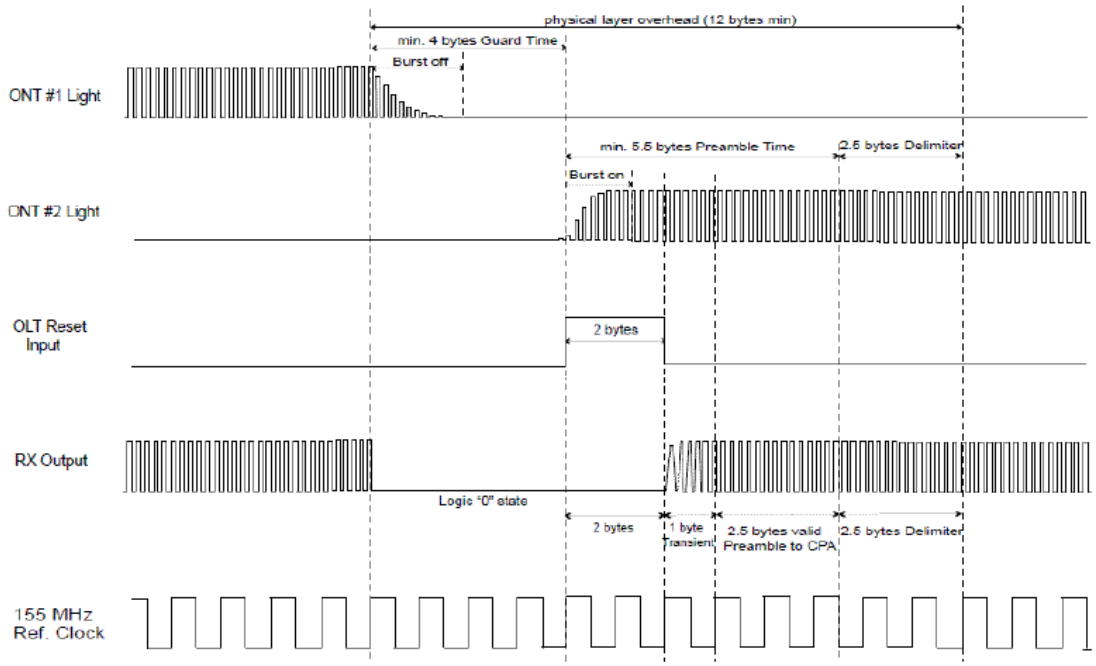

Figure1 Time parameter definition in GPON

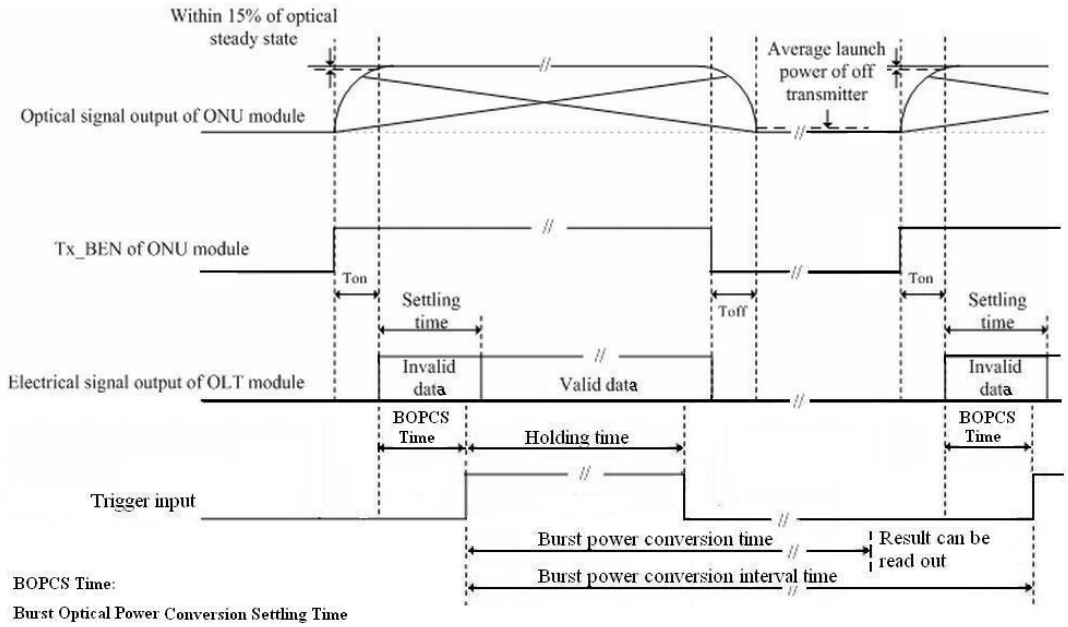

syste

Figure2 Time parameter definition of RSSI function

EEPROM INFORMATION

2 wire address 1010000X (A0)

0	Serial ID Defined by SFP MSA (96bytes)
95	Vendor Spectific (32bytes)
127	Reserved in SFP MSA (128bytes)
255	

2 wire address 1010001X(A2)

0	Alarm and Warning Thresholds (56bytes)
55	Cal Constants (40bytes)
95	Real-Time Diagnostic Interface (24bytes)
119	Vendor Specific(8bytes)
127	User Writable EEPROM (102bytes)
247	Vendor Specific(8bytes)
255	

Pin Description

Pin	Name	Description	Notes
1	VeeT	Transmitter Ground	
2	TX Fault	Transmitter Fault Indication	High: abnormal; Low: normal

3	TX Disable	Transmitter Disable-Module disables on high or open	High: transmitter disable; Low: transmitter enable
4	MOD-DEF2	Module Definition 2-Two wire serial ID interface	The data line of two wire serial interface
5	MOD-DEF1	Module Definition 1-Two wire serial ID interface	The clock line of two wire serial interface
6	MOD-DEF0	Module Definition 0-Two wire serial ID interface	Connected to Ground in the transceiver
7	Reset	Receiver Reset	High: reset the receiver
8	SD	Signal Detect	High: signal detected; Low: loss of signal;
9	RSSI Trigger	RSSI Trigger for Transceiver A/D	High: enable RSSI A/D conversion
10	VeeR	Receiver Ground	
11	VeeR	Receiver Ground	
12	RD-	Inverse Received Data out	LVPECL logic output, DC coupled
13	RD+	Received Data out	LVPECL logic output, DC coupled
14	VeeR	Receiver Ground	
15	VccR	Receiver Power —— +3.3V±5%	
16	VccT	Transmitter Power —— +3.3 V±5%	
17	VeeT	Transmitter Ground	
18	TD+	Transmitter Data In	LVPECL logic input, AC coupled
19	TD-	Inverse Transmitter Data In .	LVPECL logic input, AC coupled
20	VeeT	Transmitter Ground	

Typical Application Circuit

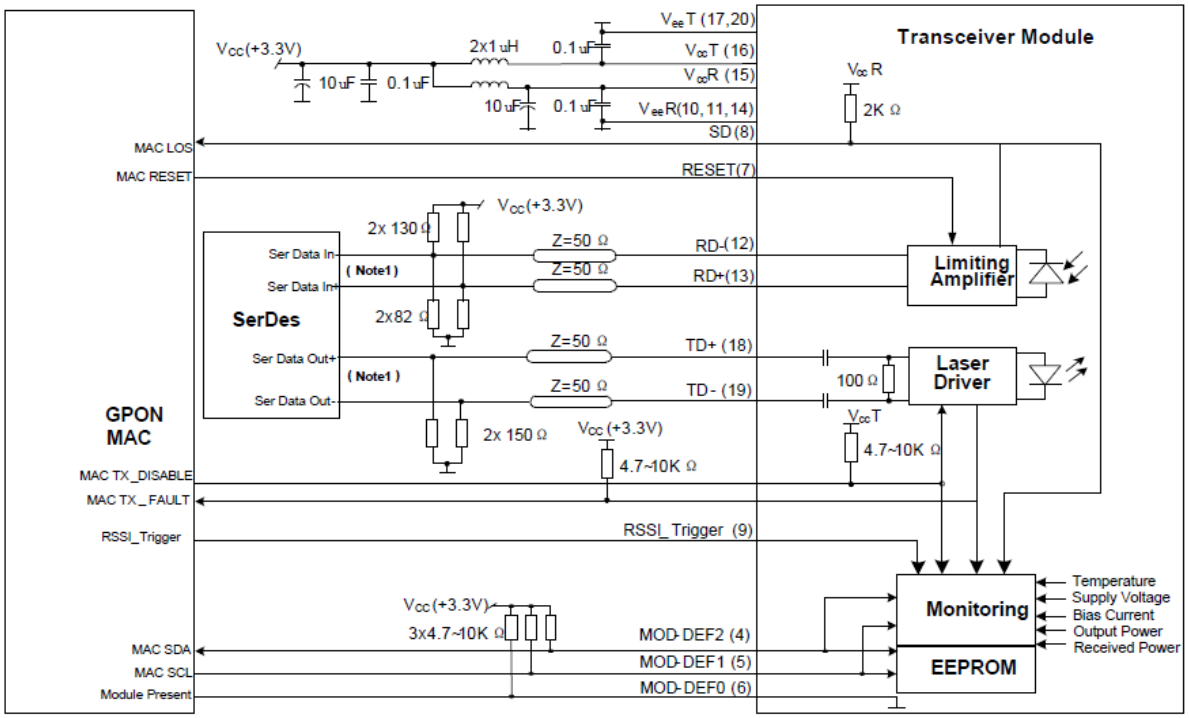

Package Outline
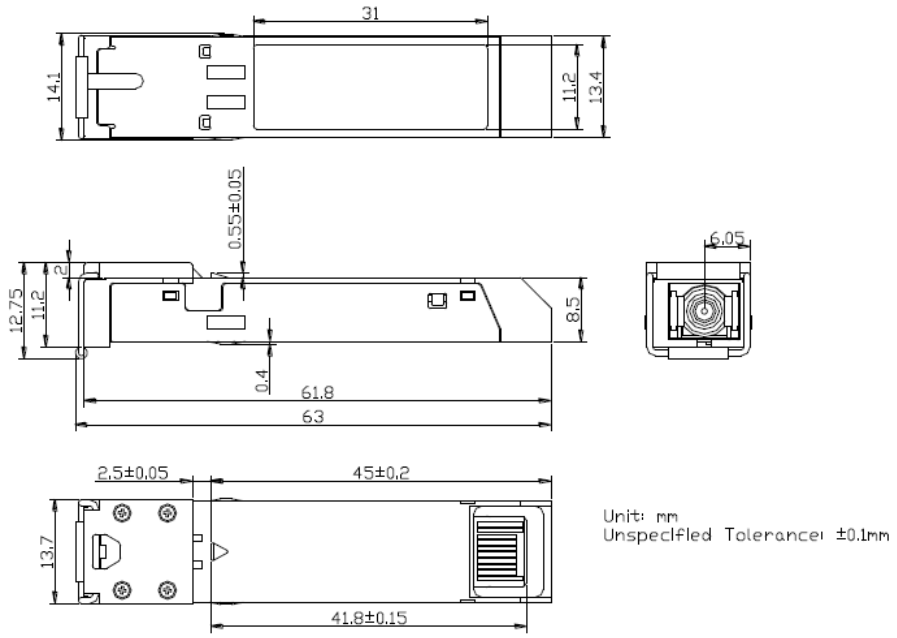
Units in mm