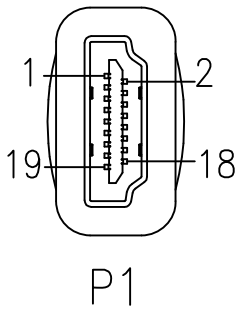

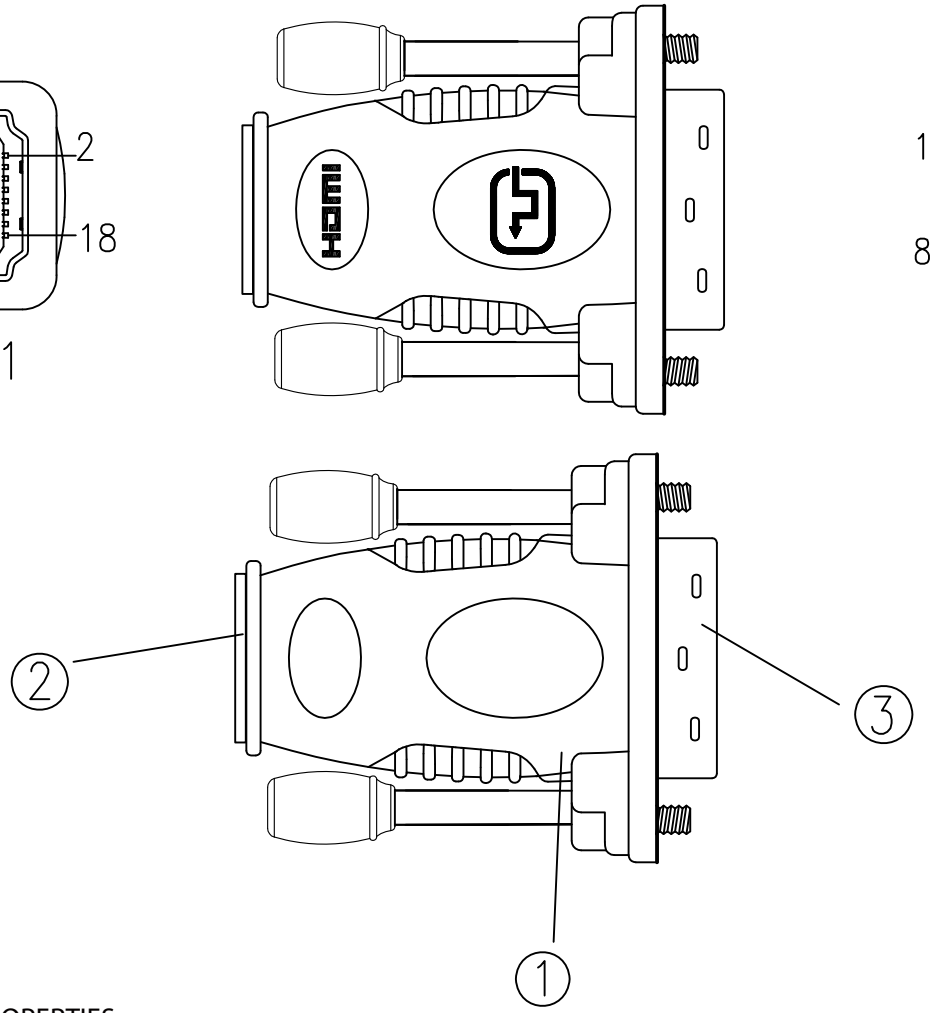

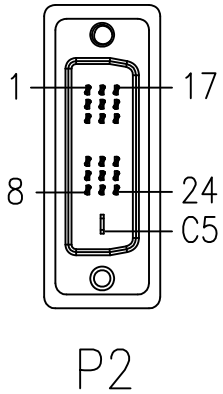

P1	P2
1	2
2	3
3	1
4	10
5	11
6	9
7	18
8	19
9	17
10	23
11	22
12	24
15	6
16	7
17	15
18	14
19	16
SHELL	SHELL

NOTES :

1. ELECTRICAL PROPERTIES :
   1.1 100% OPEN AND SHORT TEST
   1.2 100% HDTV, BLUE RAY DVD TEST (1080P)
2. ALL MATERIAL BE RoHS AND REACH COMPLIANT.

No.	PARTS NAME	Q'TY	SPECIFICATION
③	DVI-D Single Link M	1 PCS	GOLD PLATED SHELL
②	HDMI 19PIN F	1 PCS	GOLD PLATED SHELL
①	ADAPTER	1 PCS	BLACK PVC JACKET

APPROVED	CHECKED	DRAWN	CUSTOMER:	
			ITEM NO.	HDMI-11-K
			DRAW NO.	
			UNIT	mm
			SCALE	NONE

DESCRIPTION:

HDMI 19PIN F / DVI-D Single Link M

DELTACO